LTR	DESCRIPTION	DATE	APPRV'D
A	INITIAL RELEASE FOR ENGINEERING	12/23/2020	CJE

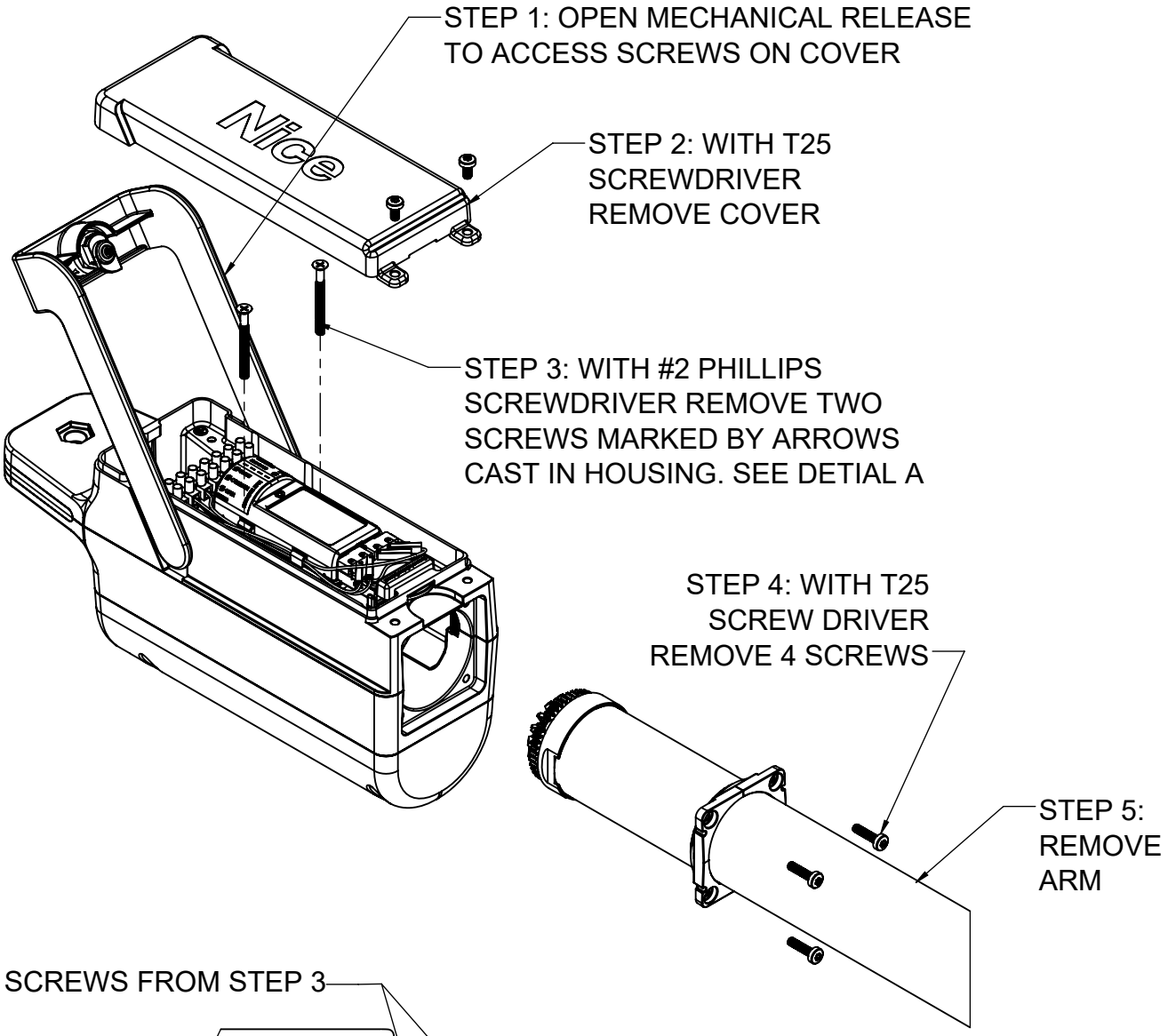

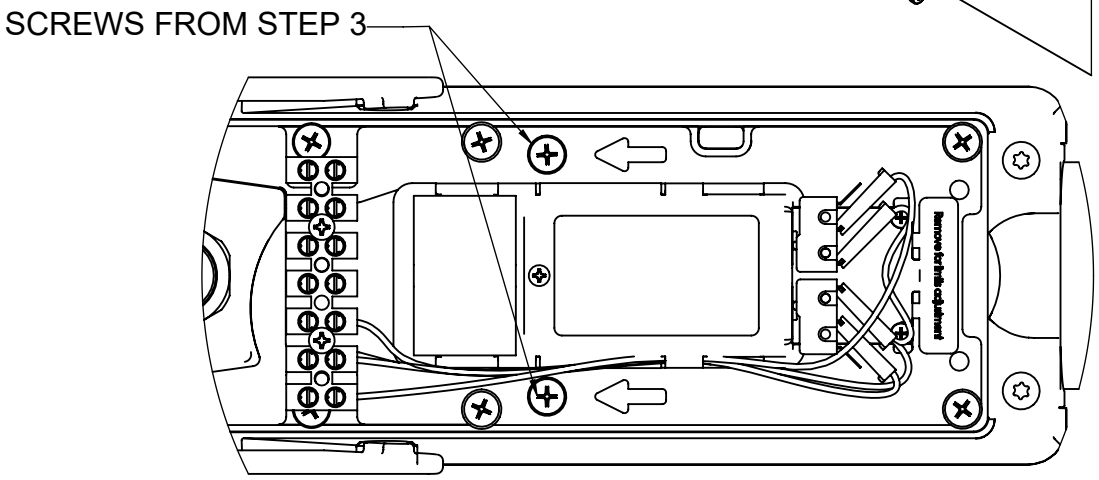

DETAIL A

NOTE: TO INSTALL ARM REVERSE STEP ORDER AS LISTED

www.ApolloGateOpeners.com
(888) 378 - 1016
Sales@ApolloGateOpeners.com